I.OCD.V1.12/16.02.2022

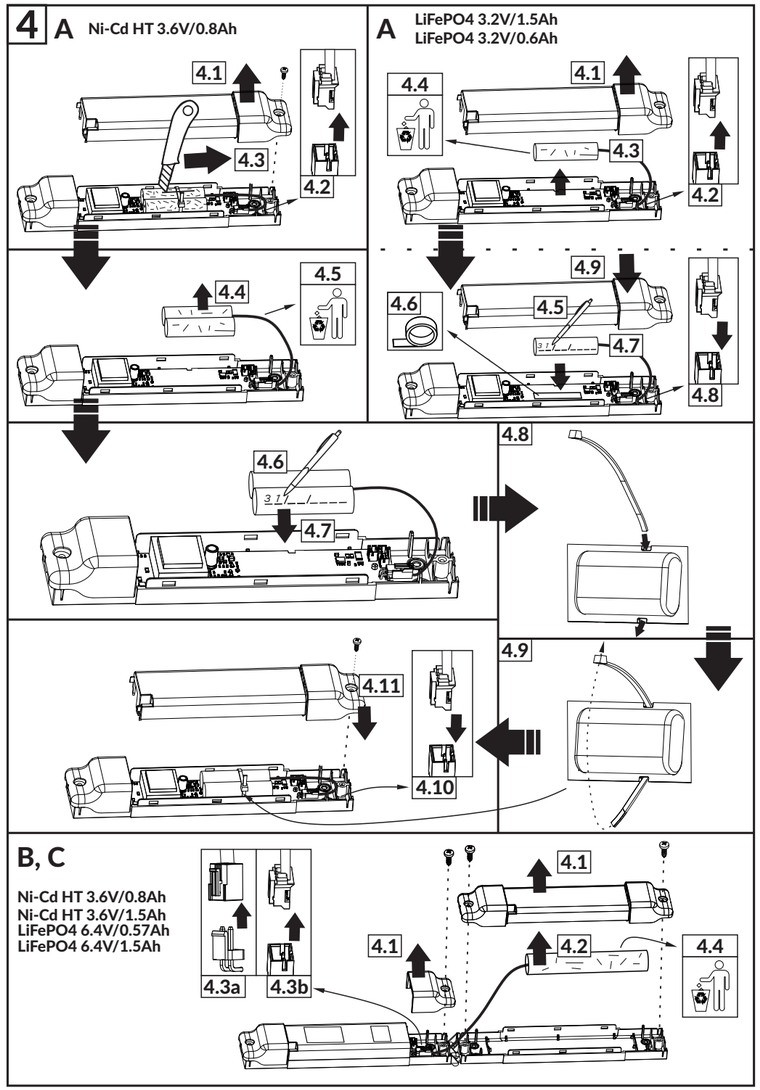

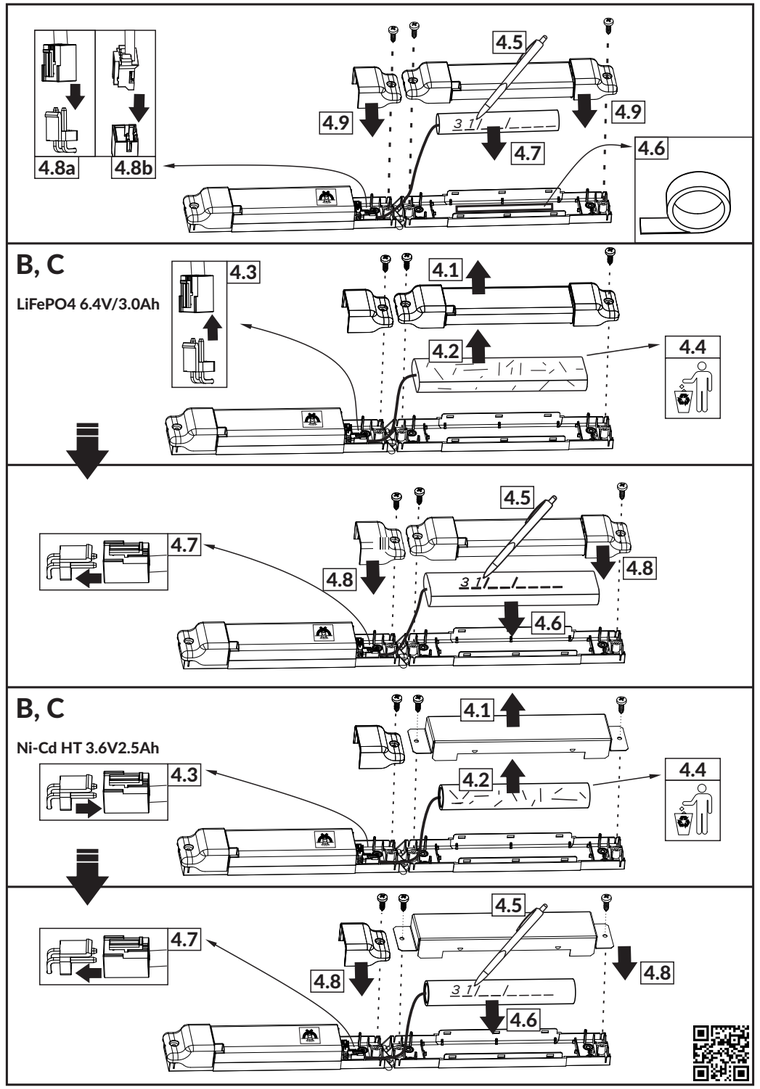

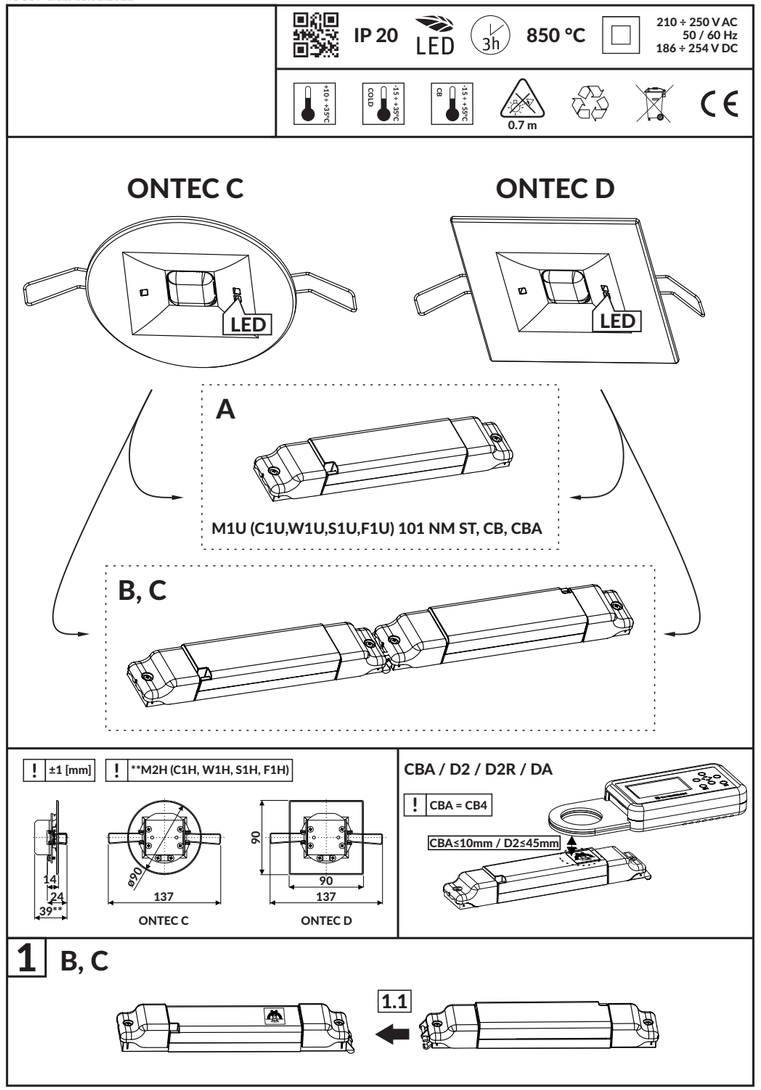
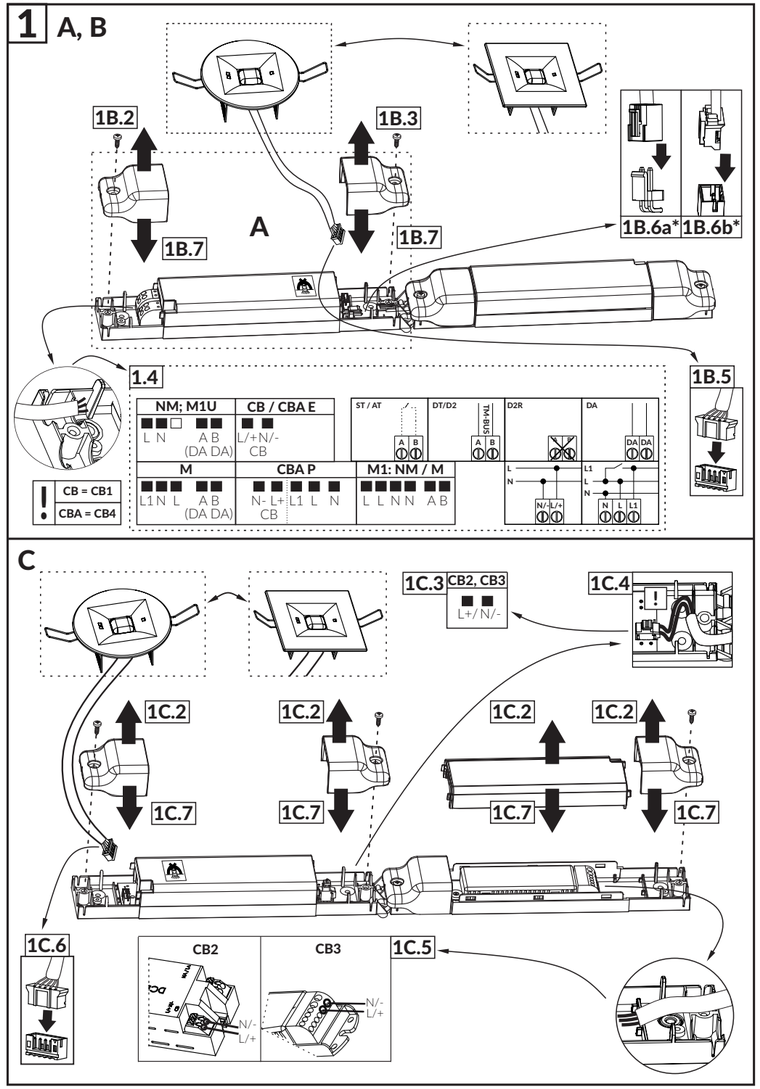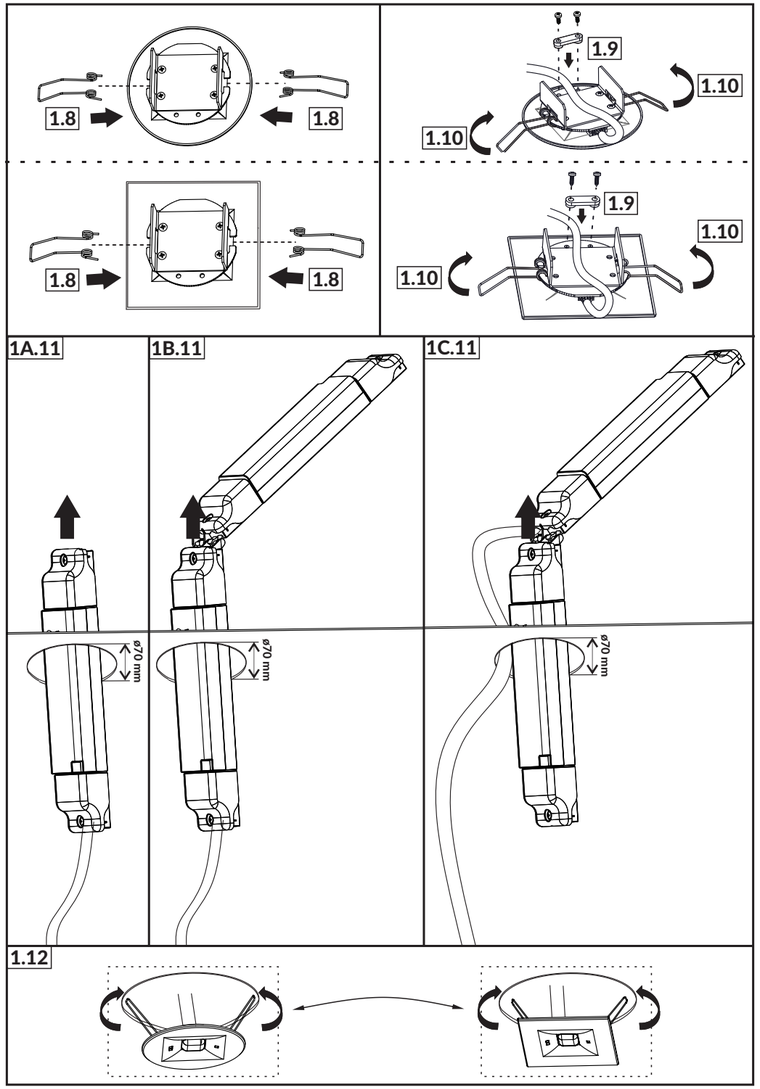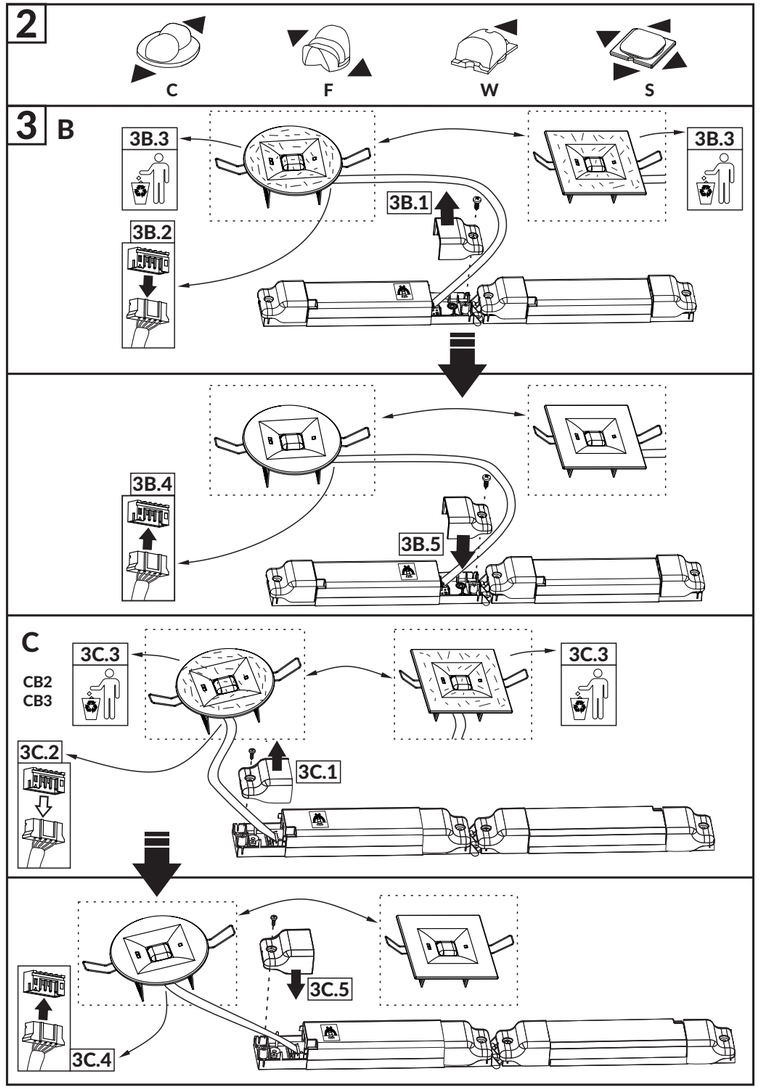
I.OCD.V1.12/16.02.2022